REPLACEMENT PARTS LIST
JNC600
146-045-050

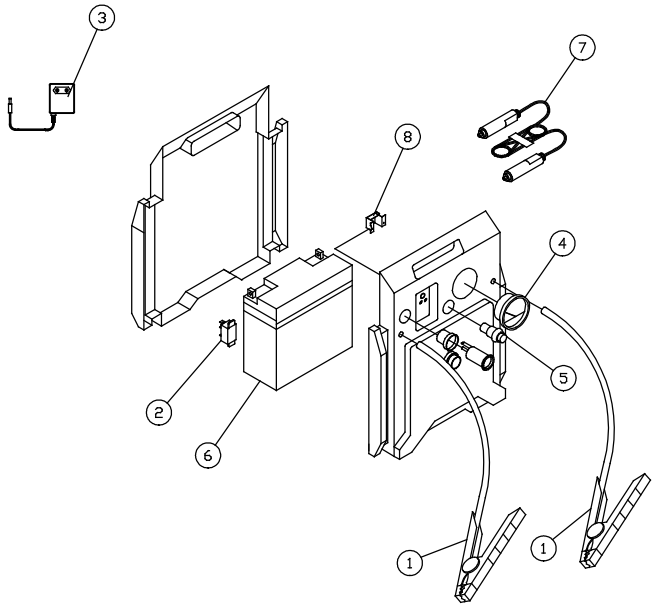

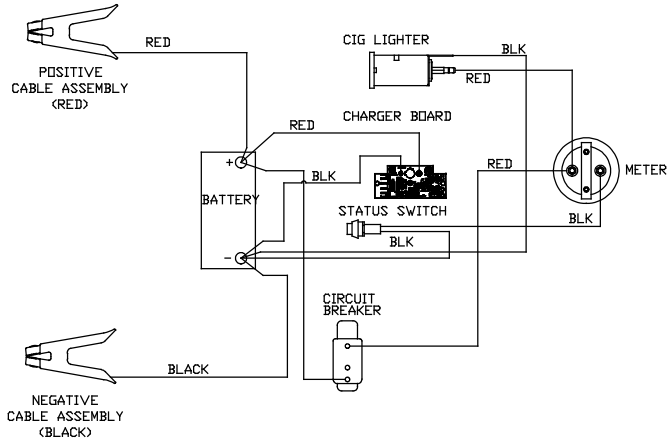

WIRING DIAGRAM

ITEM	PART NUMBER	DESCRIPTION
1	238-031-666	CABLE/CLAMP KIT, JNC600
2	246-416-666	20AMP CIRCUIT BREAKER KIT
3	141-345-666	CHARGER, 230VAC, 500Ma (A) (B)
4	247-095-666	VOLTMETER KIT
5	246-004-666	STATUS SWITCH KIT
6	235-013-666	22AMP HOUR BATTERY KIT
7	248-362-666	12V EXTENSION CORD KIT
8	865-012-150	CHARGE CONTROL BOARD KIT, JNC600/MT5145UK (B)

SERVICING SHOULD BE PERFORMED BY QUALIFIED SERVICE PERSONNEL

FORM NO. 842-372-003

© 2002 THIS DOCUMENT AND ITS CONTENTS ARE PROPRIETARY TO CLORE AUTOMOTIVE COMPANY ANY REPRODUCTION, DISCLOSURE OR USE OF THIS DOCUMENT IS EXPRESSLY PROHIBITED EXCEPT AS OTHERWISE AGREED TO IN WRITING.

REV	ECN NO.	DATE	INIT
B	22379	5/3/10	RA
A	22372	3/25/10	RA
-	22312	10/12/09	RA

UNLESS SPECIFIED DIMENSIONS ARE IN INCHES
TOLERANCES UNLESS SPECIFIED
3 PLC DEC: ±.015
2 PLC DEC: ±.03
ANGLES: ±0.5°
THIRD ANGLE PROJECTION
DATE ISSUED:

MATERIAL
MAT'L NO

DWN BY:	RA	DATE:	10/12/09
CHK BY:		DATE:	
APVD BY:	JPZ	DATE:	10/12/09
APVD BY:	JPZ	DATE:	10/12/09
APVD BY:	JPZ	DATE:	10/12/09

Clore Automotive
9831 PENN AVE. SO.
MPLS, MN. 55431

CURRENT ECO	RELEASE ECO
22379	22312
DWG SCALE	PAGE
NONE	1 OF 1

TITLE: REPLACEMENT PARTS LIST

SIZE	PART NO	REV
C	842-372-003	B